Fugitive Emission

Indian Situation in the Global Context

Index

- Fugitive Emission: Preface
- Fugitive Emission: Global Comparison
- Fugitive Emission: Source Industries
- Fugitive Emission: Impact
- Fugitive Emission: Process Plants
- Fugitive Emission: Control & Monitoring
- LDAR programs for controlling Fugitive Emission
- Fugitive Emission through valves
- Controlling fugitive emissions in valves
- Introduction of ISO 15848 Part1
- Introduction of API 624
- Fugitive Emission – International Standards
- Recommendations to Valve Manufacturers
- References

Emissions: Global Comparison

E. von Schneidemesser et al. / Atmospheric Environment 44 (2010) 5053e5064

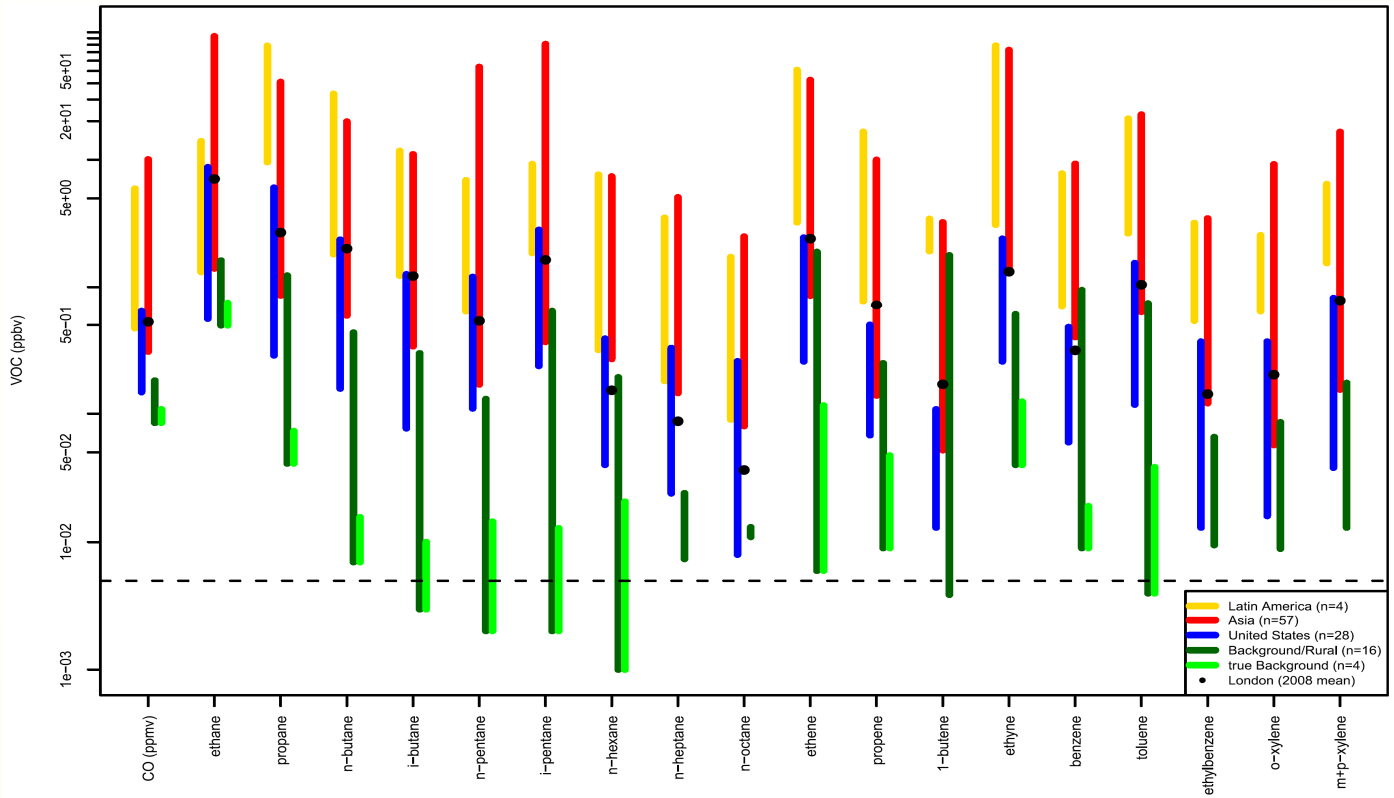

Mixing ratio range by geographic region. The number of measurement sites is indicated by the n-value. VOC mixing ratios are ppbv, CO is ppmv, the y-axis is log scale. The dashed line indicates a 5 pptv detection limit for VOCs.

Fugitive Emission: Preface

- **What are Fugitive Emissions ?**
  - Fugitive Emissions are spurious emissions known as leak of VOCs from different sources .
  - Major sources of fugitive emissions are, pumps, compressors, pressure relief valves, flange connectors and other piping components .
  - Emissions from individual components can be small, the cumulative effect can be extremely significant .
- **What are VOC's ?**

VOC – Volatile Organic Compounds are the organic compounds usually hydrocarbon in gaseous form whose vapor pressure at 20 Deg C exceeds 1 Kpa. As a result this can easily become vapor or gas from solid or liquid state.

Fugitive Emission: Preface

- **What are sources of VOC's ?**
  - Naturally occurring VOC's emitted from vegetation like tropical/extra tropical forests emitting reactive/non reactive hydrocarbons like isoprene referred as **Biogenic**.
  - Others emitted from urban sources like vehicle emissions –exhaust, decomposition of wastes, solvents, industrial processes, oil refining, petrochemicals power plants etc. referred as **Anthropogenic .**

Fugitive Emission: Source Industries

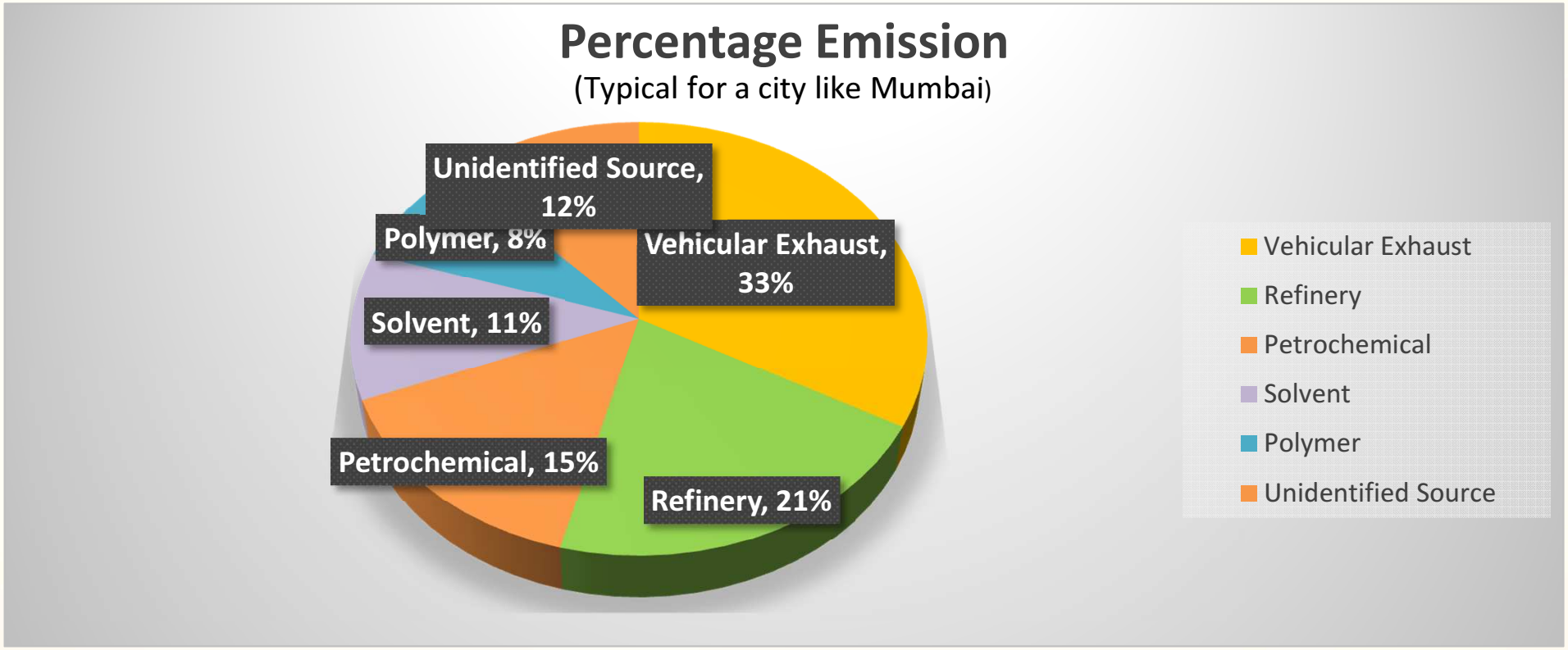

Fugitive Emission: Impact

Following are the main impacts of emissions from chemical plants-

- Emission of VOCs, which can cause significant health & environmental problems.
- Emission of process and service chemicals represent financial loss to the operating company
- Emission of VOCs contributes in Global Warming

Fugitive Emissions - Process Plants

- **Design Emissions**

  These are known at design stage like analyzer vents, purge streams etc.

- **Fugitive emissions**

  These are unanticipated or spurious emissions from any part of the plant like pump seals, valves, flanged joints etc.

- **Major Source of fugitive emission**

  Evaporative emission sources like Hydrocarbon storage & transfer facility, loading unloading, waste water storage, transfer & treatment facility, cooling towers etc.

Fugitive Emissions - Process Plants

- **Process Equipment emission** sources like Valves - Block & Control, Pumps & compressors seals, Piping & Equipment Flange Joints, pressure relief valves, Sampling Connections etc.

- **EPA in 1999-2000 estimated that in US leaks not found and repaired could result in additional VOC emissions of 80 million pounds annually (90-100 tons /day)**

Fugitive Emission: Control & Monitoring

- For Oil Refinery & other Industries in India Fugitive Emission norms are controlled & monitored through Leak detection & repair program – LDAR
- OISD-GDN-224 gives guidelines for monitoring & control of VOC Emissions applicable for Refineries & Gas Processing Plants in India which includes emissions through valves & equipment as 10,000 ppm per source above background concentration level when measured at a distance of 1 cm from the surface of potential source with the instrument calibrated with methane. However, several refineries use a 500 PPM limit rather than regulatory limit.
- Central pollution control board of India has proposed revised norms effective 2010 limiting emissions to 3000 ppm for valves/flanges .

Fugitive Emission: LDAR Program

Control & monitoring of emission

- LDAR is scheduled in plants periodically depending upon the equipment
- The most common technique for measurement of fugitive emissions is concentration monitoring or Sniffing based on EPA – 21.
- Emissions reductions from implementing an LDAR Program potentially reduce product losses, increase safety for workers and operators, decrease exposure of the surrounding community and help facilities avoid enforcement actions.

Fugitive Emission: LDAR Program

- Under LDAR guidelines, Central Pollution Control Board of India had proposed the following standards of VOC emission from the components in petrochemical industries.

S. No.	Component	General Hydrocarbon in ppm		Benzene in ppm	
		w.e.f 1.1.07	w.e.f 1.1.10	w.e.f 1.1.07	w.e.f 1.1.10
1	Pump / Compressor	10000	5000	3000	2000
2	Valves / Flanges	10000	3000	2000	1000
3	Other Components	10000	3000	2000	1000

Fugitive Emission through Valves

- In any refinery & petrochemical complex, due to high population, Valves are considered the most contributing equipment in fugitive emissions (more than 50%) among the various equipment in oil refinery.
- For an average size of valve the fugitive emission losses could vary from 234 kg/year/source to 609 kg/year/source based on estimates and actual data.
- Generally for valves the emission source is valve gland (Stem Seal) & body bonnet bolted joint (Body Seal).

Fugitive Emission: Valves

Valve contributes more than 50% of the total emission from all equipment in oil refinery.

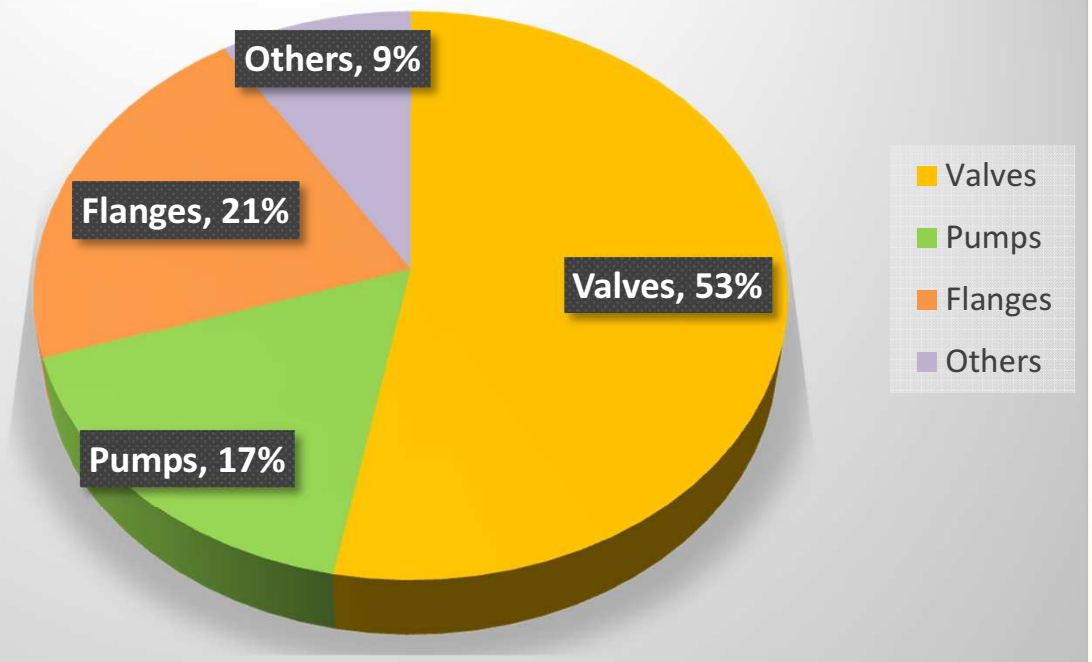

Controlling Fugitive Emission in Valves

- LDAR Program is associated with monitoring of fugitive emission from equipment during operation & maintenance of the plant.
- It is important to have the equipment like valves with better sealing properties to reduce the fugitive emissions. This leads to the qualification of the sealing components of equipment like valves during manufacturing stages.
- The best option to combat the fugitive emission from valve gland is to use the bellow seal valves.
- Bellow seal design has limitation of additional height from valve center to hand wheel to accommodate the stem extension for the bellow. This restricts the max size of the bellow seal valve. Also the cost is comparatively higher .

Controlling Fugitive Emission in Valves

- Non bellow seal valves require qualification of fugitive emission of stem & body seal during manufacturing stage.
- This calls for the use of fugitive emission qualified gland packing & gasket. The surface finish of the stem & inside surface of stuffing box are maintained. In few severe & hazardous services, hard coating on stem surface is also done to restrict the wear & corrosion on stem surface.
- The widely accepted standard for valve fugitive emission qualification is ISO 15848 Part1, API 624, TA-Luft, VDI 2440 & Shell SPE 77/312.
- Live loading arrangement on gland packing with Belleville washer helps to control the fugitive emission from gland up to certain extent.
- Based on few reports, the leakage from valve gland (Stem Seal) is appx (80%). Leakage from valve body bonnet bolted joint appx (20%)

Controlling Fugitive Emission in Valves

Leakage from valve

- Leakage from valve gland (Stem Seal) is (80%)
- Leakage from valve body bonnet bolted joint (20%)

Controlling stem seal leakage

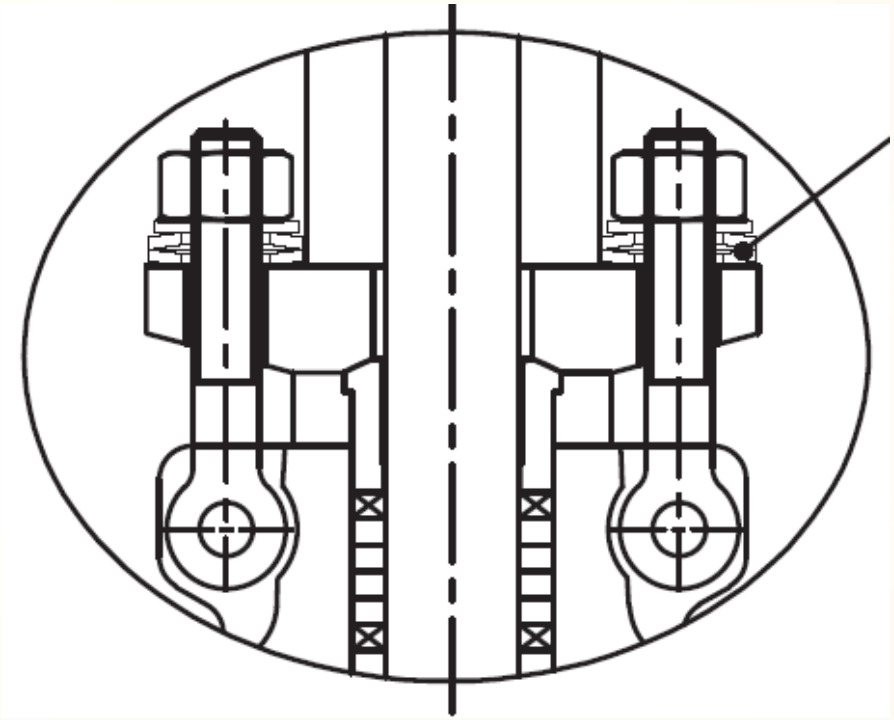

Brief description of ISO 15848 Part 1 2015

- For evaluation of external leakage of valve stem seals (or shaft) and body joints of isolating valves and control valves intended for application in VOCs

Type Test – Test Conditions

- Preparation of a valve to be tested – The valve shall be selected at random from production & shall be cleaned & dried.
- Test fluid -- Either Helium or Methane
- Test Temperature – Room temperature to the selected temperature i.e. -196, -46, 200 or 400 Deg C.
- Measurement of test valve temperature

Leakage Measurement

- Stem or Shaft leakage measurement
- Body seal leakage measurement

Brief description of ISO 15848 Part 1 2015

Test Set Up

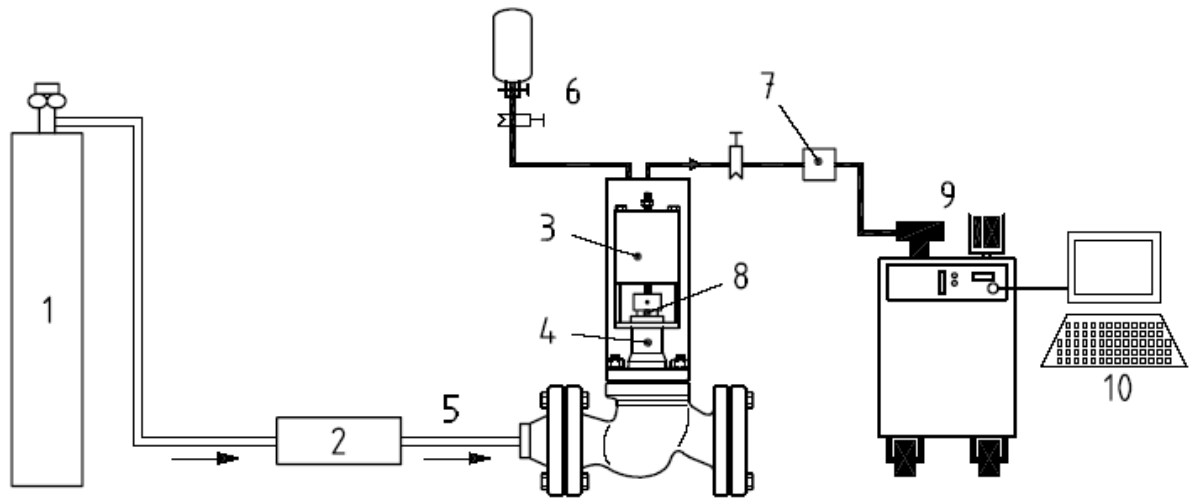

Key

1	helium at 97 % purity	6	standard calibrated leak
2	pressure control	7	vacuum safety
3	actuator	8	tested stem sealing
4	vacuum	9	helium mass spectrometer
5	helium	10	data acquisition

Brief description of ISO 15848 Part 1 2015

- Classification Criteria is defined by the following performance classes resulting from the Type Test.

1. Tightness Class – For Stem or Shaft Seal

Table 1 — Tightness classes for stem (or shaft) seals with helium

Class	Measured leak rate (mass flow)	Measured leak rate (mass flow)	Measured leak rate (volumic flow)	Remarks
	$mg \cdot s^{-1} \cdot m^{-1}$ stem perimeter (for information)	$mg \cdot s^{-1} \cdot mm^{-1}$ stem diameter through stem seal system	$mbar \cdot l \cdot s^{-1}$ per mm stem diameter through stem seal system	
AH[a]	$\leq 10^{-5}$	$\leq 3{,}14 \cdot 10^{-8}$	$\leq 1{,}78 \cdot 10^{-7}$	Typically achieved with bellow seals or equivalent stem (shaft) sealing system for quarter turn valves
BH[b]	$\leq 10^{-4}$	$\leq 3{,}14 \cdot 10^{-7}$	$\leq 1{,}78 \cdot 10^{-6}$	Typically achieved with PTFE based packings or elastomeric seals
CH[b]	$\leq 10^{-2}$	$\leq 3{,}14 \cdot 10^{-5}$	$\leq 1{,}78 \cdot 10^{-4}$	Typically achieved with flexible graphite based packings

Brief description of ISO 15848 Part 1 2015

- Tightness Class – For Body Seal

Table 2 — Leakage from body seals with helium

Measured leakage ppmv
≤50

Brief description of ISO 15848 Part 1 2015

2. Endurance Class

CO1 – Total 500 Cycles. Two room Temp Cycle & two thermal cycles

CO2 – Total 1500 Cycles. Additional One thermal cycle & one room temp Cycle.

CO3- Total 2500 cycles & extension to CO2, One more additional Thermal cycle & one more Room temp cycle.

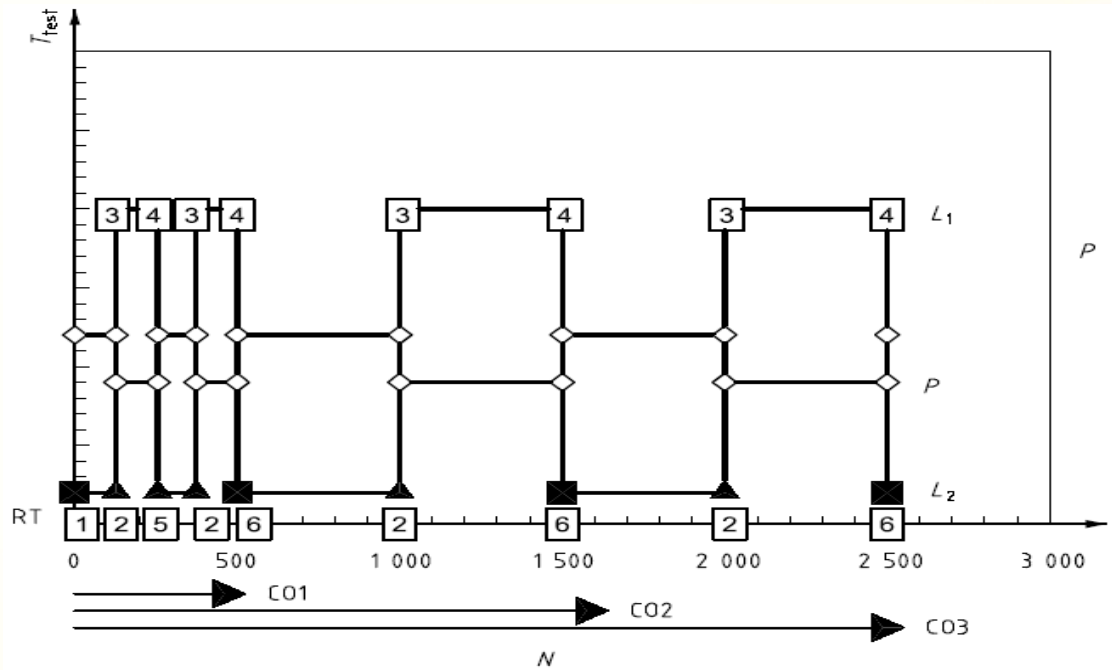

Stem Seal adjustment SSA only 1 SSA-1 is allowed for CO1 & 2 SSA-2 is allowed in CO2

Brief description of ISO 15848 Part 1 2015

3. Temperature Class

Table 5 — Temperature classes

(t-196 °C)	(t-46 °C)	(tRT)	(t200 °C)	(t400 °C)
−196 °C	−46 °C	Room temperature, °C	200 °C	400 °C

Test at -196 Deg C qualify the range from -196 Deg C to Room Temp.

Test at -46 Deg C qualify the range from -46 Deg C to Room Temp.

Test at RT qualify the range from -29 Deg C to +40 Deg C

Test at 200 Deg C qualify the range from RT to 200 Deg C.

Test at 400 Deg C qualify the range from RT to 400 Deg C.

Fugitive Emission: Vendor Qualification Sample Report

(Typical Report)

ISO 15848 Part1 2015

Specifies maximum allowable leakage rate as 5.03×10^{-5} (mbar.litre/sec).

As per vendor test report Leakage rate measured is 5.03×10^{-7} (mbar.litre/sec).

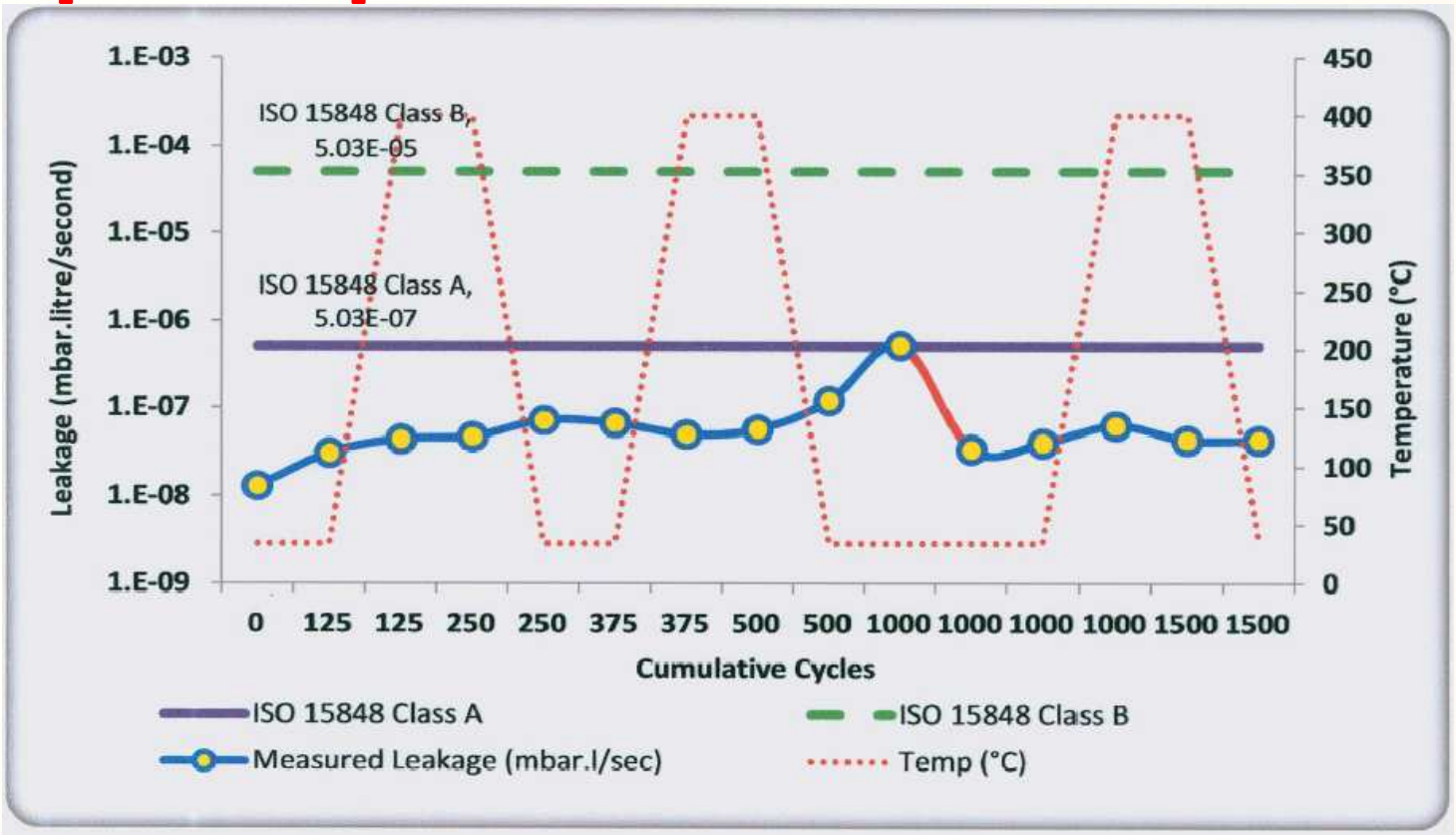

Introduction to API 624

- Test Fluid is Methane.
- Requirement and acceptance criteria (leakage rate ≤100 ppmv)
- Applicable to rising and rising-rotating stem valves, with graphitic packing
- Testing requirement based on EPA method
- Cycle test
  - 310 mechanical cycles, 4 ambient cycles, 3 thermal cycles
  - Temperature 260 deg C
  - <100 ppmv
  - No packing adjustments
  - No provision of productions Test.

Fugitive Emission: International Standards

- As stated earlier, there are various standards of fugitive emission qualification of valves as per ISO 15848, API 624, TA Luft, VDI 2440 & Shell SPE 77/312 specifying different test conditions, procedures & acceptance criteria.
- It is difficult to compare these qualification standards one to another.
- End User may opt either of these standard & ask manufacturer to comply or vice versa.
- It is required to established one uniform fugitive emission standard accepted by all major body which is helpful to end user & valve manufacturer . As of now ISO 15848 appears to be the most comprehensive standard which gives flexibility to end users to choose as per their project specific requirements and ensures consistency during production .

Recommendations to End Users &Valve Manufacturers

- End Users & Manufacturers to promote awareness of the use of fugitive emission compliant valves to help environment, ensure good health & safety of each and everyone of us as well as future generations. This will also reduce financial losses to end users by reducing loss of service fluid.
- End users to ensure specifying detailed requirements to manufacturers for compliance. API 624 is one step in this regard but does not fully ensure compliance during production. End Users should provide complete details of FE test parameters like leakage class, number of cycles, test temperature as mandatory in their valve specifications.
- Manufacturers to ensure rigorous implementation of this design in production of valves and not limit only to type test Manufacturers should make fugitive compliant valves as a standard feature rather than special requirement.
- As far as possible develop the fugitive emission testing facility in-house.

References

- **OISD – GDN –224**
- **EPA-453/R-95-017 (1995)** https://www3.epa.gov/ttnchie1/efdocs/equiplks.pdf
- **API 600**
- **ISO 15848 Part 1 & 2**
- **API 624**
- **Journal of Civil & Environmental Engineering**

Article: Volatile Organic Compounds in India: Concentration and Sources
By: Manisha Gaur, Rina Singh and Anuradha Shukla
https://www.omicsonline.org/open-access/volatile-organic-compounds-in-india-concentration-and-sources-2165-784X-1000251.pdf

- **Leak Detection and Repair A Best Practices Guide**

https://www.epa.gov/sites/production/files/2014-02/documents/ldarguide.pdf

- **Understanding and control of fugitive emissions**

http://www.ldarenvolve.com/downloads/control_emissions.pdf

- GSR 186 (E) Ministry of Environment & Forests notification

THANK YOU

FLOW CONTROL EXCHANGE INDIA